C7864 2.4/Female to 3.5/Male Adapter 33 GHZ

Rev 000

Electrical	
Frequency	0-33 GHZ
VSWR	1.15 Max
Impedance	50 Ohms
Mechanical	
2.4 Interface per	IEEE STD 287
3.5 Interface per	IEC 60169
Materials	
Body	Passivated Stainless Steel
Contacts	BeCu
Contact Plating	Au 50µ" Min
ROHS Compliant	

Outline

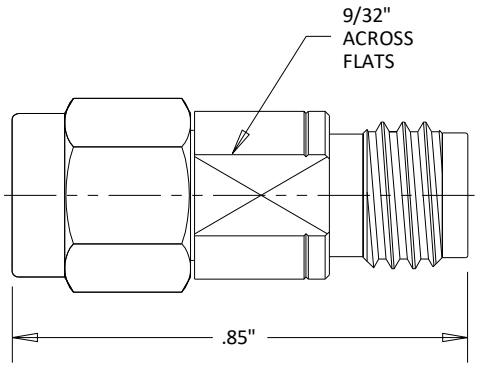

Dimensional Tolerances

.X	±.030
.XX	±.010
.XXX	±.005

Typical Data

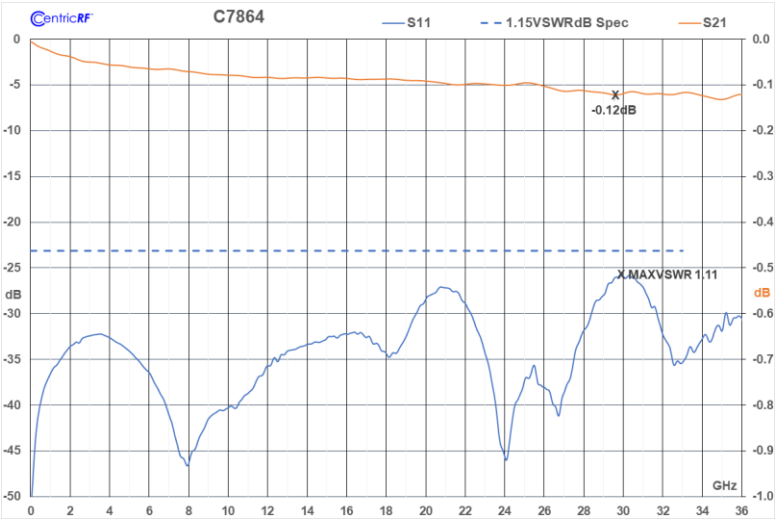

1130 Junction Dr. Suite 100. Allen, TX 75013 800-399-6891 www.CentricRF.com