C8187 1.0/Female to 1.85/Male Adapter 67 GHZ

Rev 000

Electrical	
Frequency	0-67 GHZ
VSWR	1.25 Max
Impedance	50 Ohms
Mechanical	
1.85 & 1.0 Interface per	IEEE P287
Operating Temperature	-45°C to +125°C
Materials	
Body	Passivated Stainless Steel
Contacts	BeCu
Contact Plating	Au 50µ" Min
ROHS Compliant	

Outline

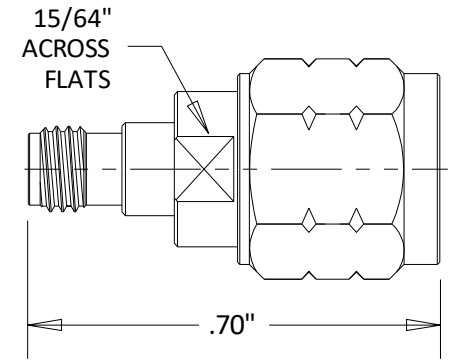

Dimensional Tolerances

.X	±.030
.XX	±.010
.XXX	±.005

Typical Data

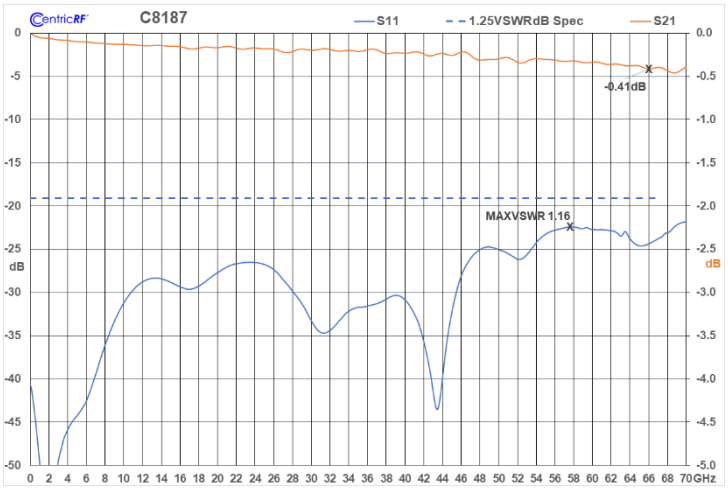

1130 Junction Dr. Suite 100. Allen, TX 75013 800-399-6891 www.CentricRF.com