CWR90SC SMA/Female to WR90 Coaxial to Waveguide Adapter 8.2-12.4 GHZ

Rev 001

Electrical	
Frequency	8.2-12.4 GHZ
VSWR	1.25
Impedance	50 Ohms
Mechanical	
SMA Interface per	MIL-STD-348B
Materials	
Body	Si/Cu
Body(SMA)	Passivated Stainless Steel
Contact	BeCu
Contact Plating	Au
Dielectric	PTFE
ROHS Compliant	

Outline

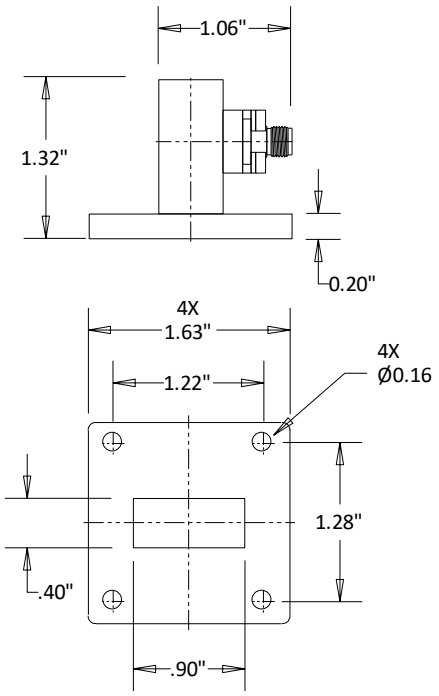

Dimensional Tolerances

.X	±.030
.XX	±.010
.XXX	±.005

1130 Junction Dr. Suite 100. Allen, TX 75013 800-399-6891 www.CentricRF.com